1. Piston spring guide
2. Piston spring (ø1.2X ø12.4X76X15.5)
3. Piston
4. Piston packing
5. Cylinder
6. Sheath
7. Seal ring
8. Aluminium barrel (ø8.50X135.5 MM)

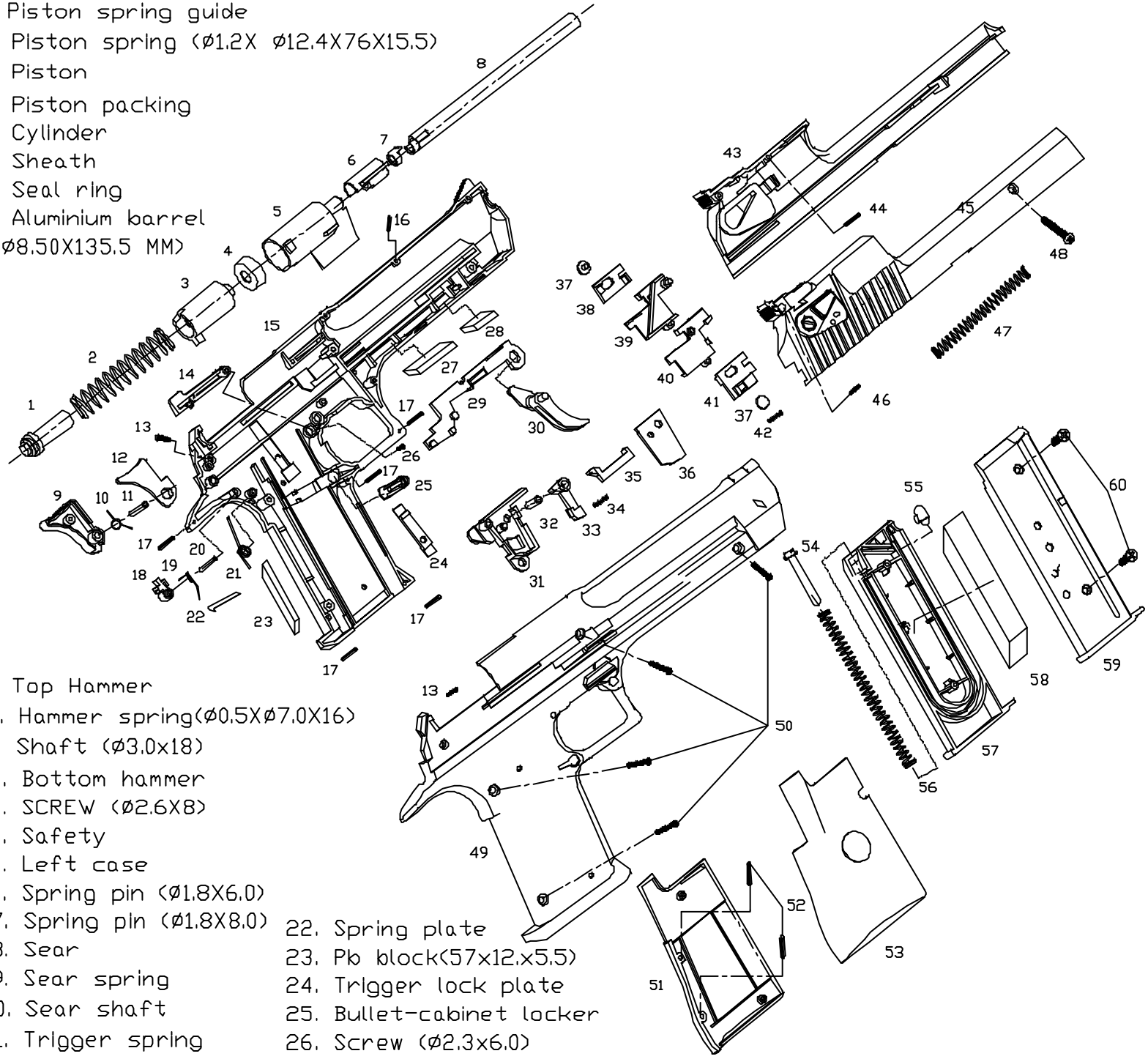

9. Top Hammer
10. Hammer spring(ø0.5Xø7.0X16)
11. Shaft (ø3.0x18)
12. Bottom hammer
13. SCREW (ø2.6X8)
14. Safety
15. Left case
16. Spring pin (ø1.8X6.0)
17. Spring pin (ø1.8X8.0)
18. Sear
19. Sear spring
20. Sear shaft
21. Trigger spring
22. Spring plate
23. Pb block(57x12.x5.5)
24. Trigger lock plate
25. Bullet-cabinet locker
26. Screw (ø2.3x6.0)
27. Pb block (39.5x12x5.5)
28. Pb block (28.5x12x5.5)
29. Trigger rod
30. Trigger
31. Trigger rod supporter
32. Copper shaft (ø4.0x14)
33. Piston lock
34. Piston spring
35. Hammer pusher
36. Piston lock supporter cover
37. Plastical cap
38. Inner bullet frame cover(L)
39. Inner buller frame(L)
40. Inner buller frame(R)
41. Inner bullet frame cover(R)
42. Bullet lock spring
43. Slide(L)
44. Spring pin(ø1.8x6.0)
45. Slide(R)
46. Screw(ø2.0x12)
47. Press spring
48. Screw (ø3.0x24)
49. Right case
50. Screw (ø3.0x14)
51. Grip(L)
52. Spring pin(ø2.3x10)
53. Grip(R)
54. Bullet spring lock
55. Bullet loader
56. Bullet spring
57. Bullet left cover
58. Pb plock(64.6x12x16)
59. Bullet right cover
50. Screw (ø2.3x14)